NATE

LTE'S GET ACTIVE

NT33 ___

2SACRF2

Product Specification



www.natekj.com

NATE DRIVE

Product Specification

NT33-2SACRF2

Product Characteristics



- Height Range : 695-1135mm
- Length range : 934-1254mm
- Size of desktop fits : 1000-1400mm
- Foot length : 560mm
- No hole design ,
- Load Capacity : 70kg
- Maximum speed : 22mm/s
- Low Noise Level : ≤50dB
- Anti-collision
- Standby : <0.1W
- Color : White (RAL9016) Black (RAL9005)
  Grey (RAL7045)
- Package Size : 770x260x181mm
- Gross/ Net Weight : 14.3/11.8
- 1.2m tabletop packing size:1265*675*130
- 1.2m tabletop Gross Weight: 24.5

Available options

- Support customize colors
- Match with any hand controller
- Available with many type of feet

Usage

- Work schedule: 10%, 2 minutes of work and 18 minutes of rest
- Usage environment: Indoor
- Storage and Transportation Temperature:-10℃ ~ 70℃

Dimension drawing

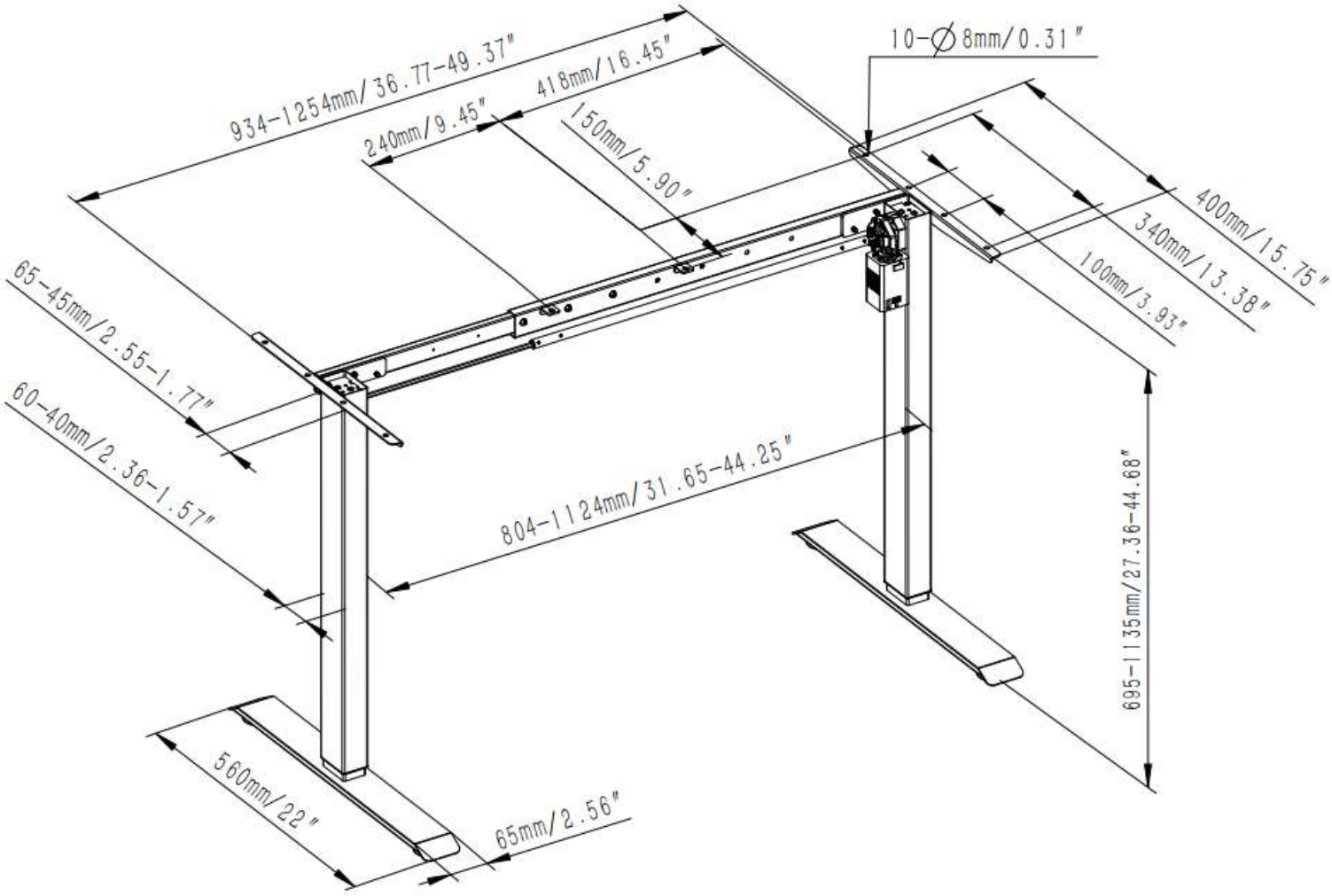

Example of naming convention

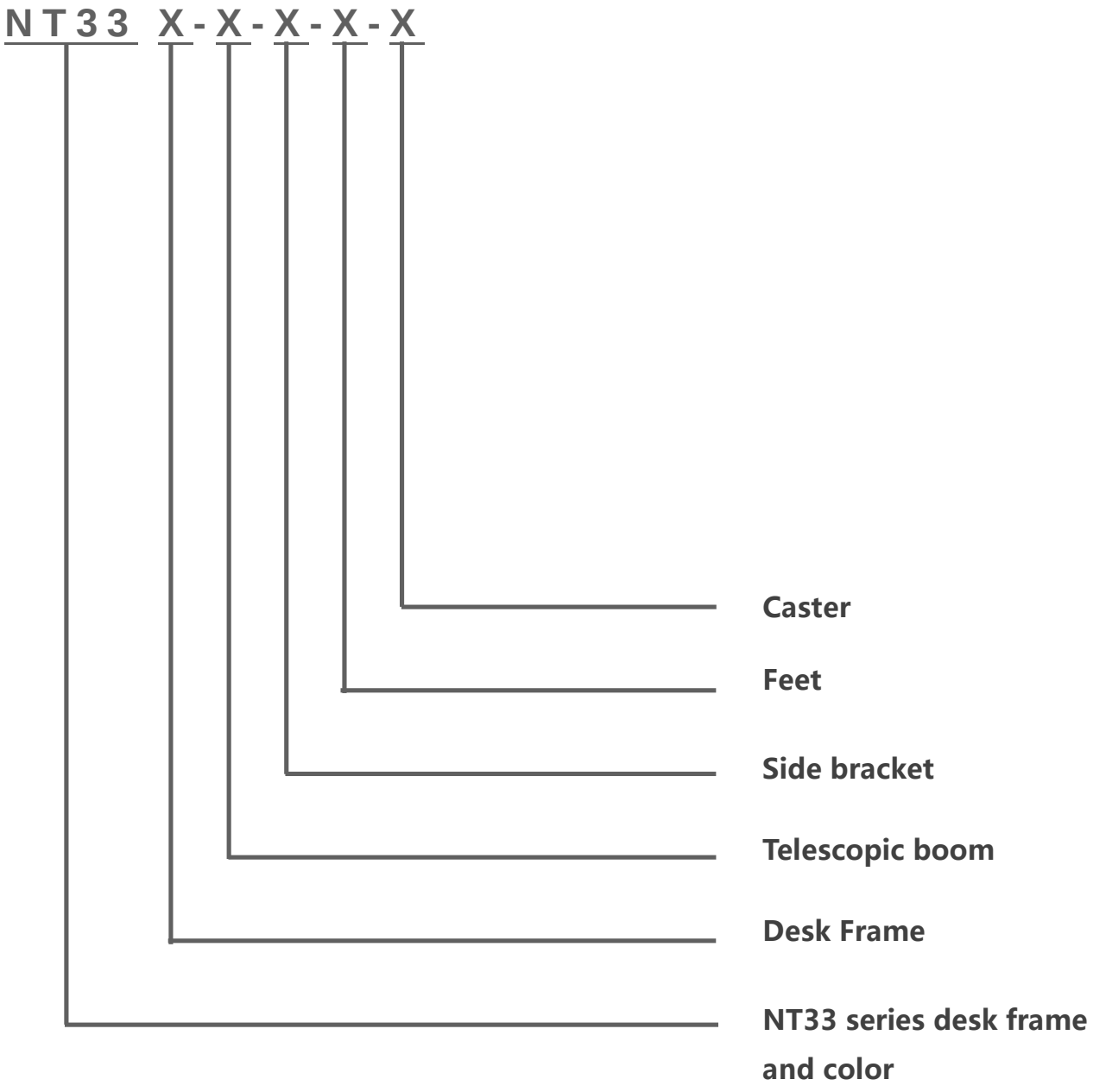

F represents no holes / A represents upwards / R represents reverse