NATE

LTE'S GET ACTIVE

NT33 - 4DF3A

Product Specification



www.natekj.com

NATE DRIVE

Product Specification

NT33-4DF3A

Product Characteristics

- **Height Range ： 600-1250mm**
- **Stoke ： 650mm**
- **Frame Range ： 1010-1750mm**
- **Compatible with tabletop size ：（ 1200~1800mm ） * 2**
- **Hole-Free Column Design**
- **Load Capacity ： 200kg**
- **Max Speed ： 40mm/s**
- **Low noise level ：≤ 50dB**
- **Anti-collision**
- **Standby consumption ： < 0.1W**
- **Surface ： Spray plastic white (standard)**
- **black (standard)**
- **grey (standard)**

- **Package Size ： 2X 1060*280*255mm+1040*270*100mm+330*260*85mm**
- **Package weight ： 83.8kg**

Available options

- **Support customize colors**
- **Match with any hand controller**
- **Available with many type of feet**

Usage

- **Work schedule: 10%, 2 minutes of work and 18 minutes of rest**
- **Usage environment: Indoor**
- **Storage and Transportation Temperature:-10℃ ~ 70℃**

Dimension drawing

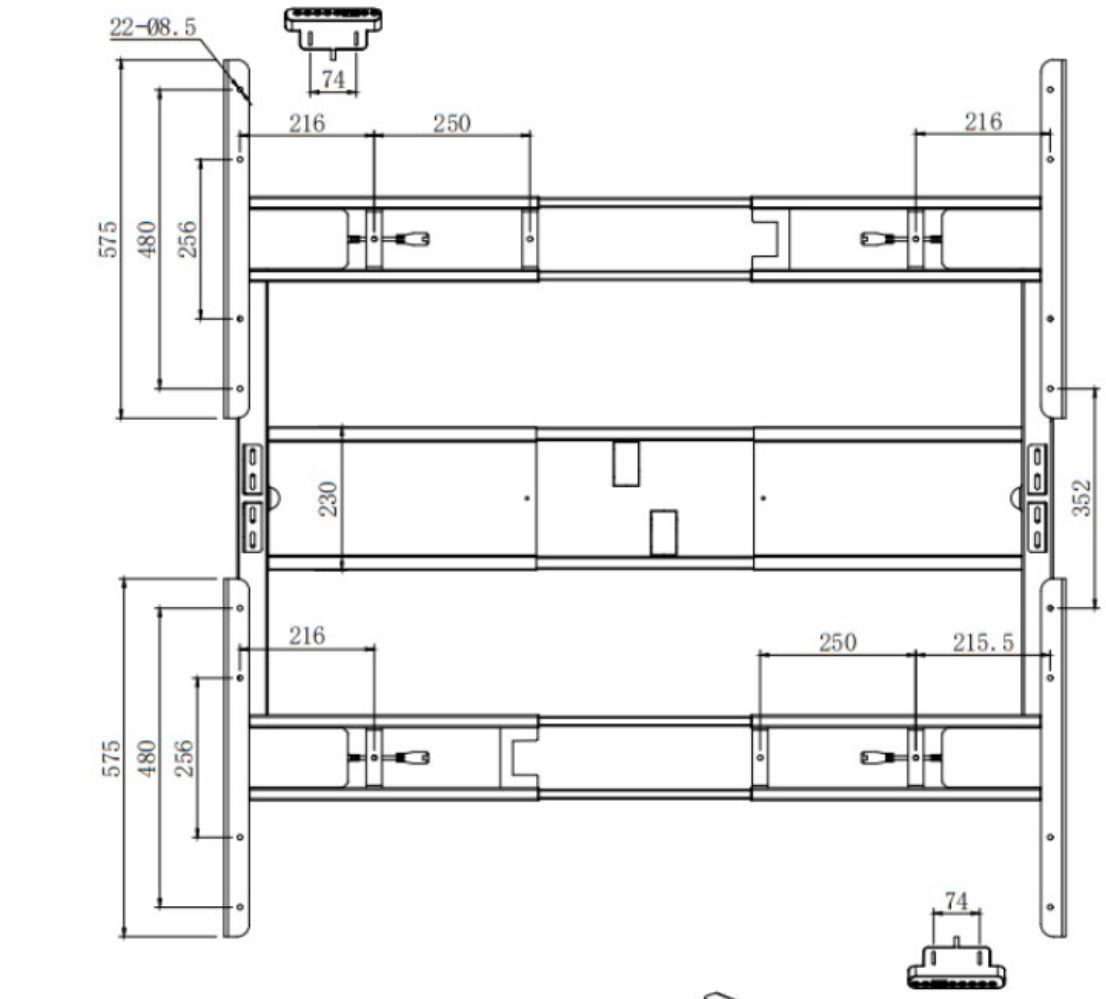

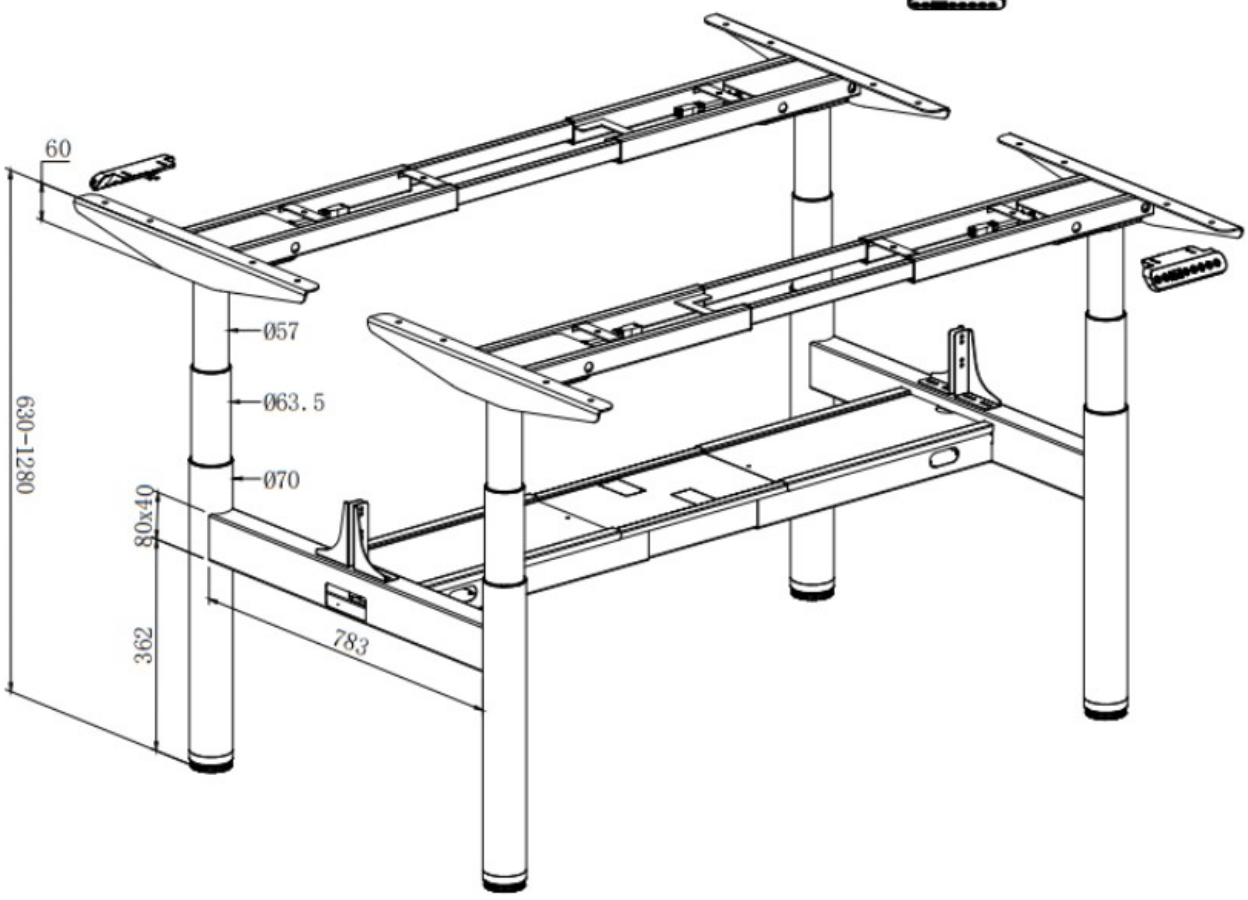

Examples of naming rules

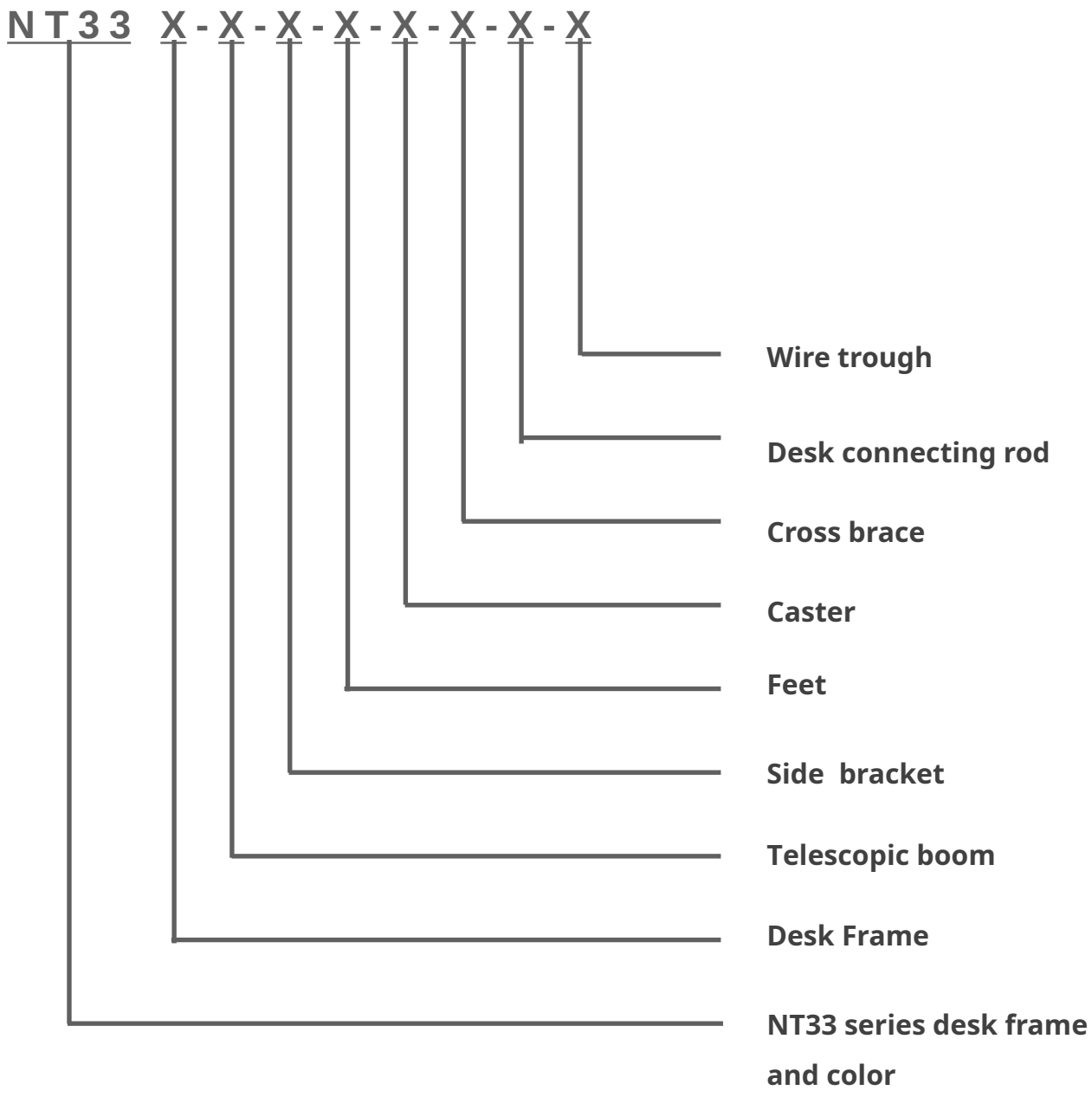

F represents no holes / R represents reverse