NATE

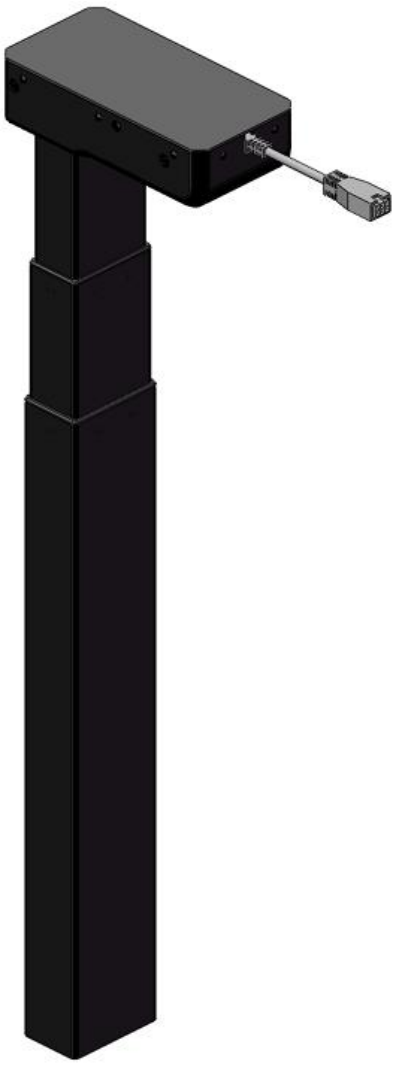

LIFTING COLUMN

AF3

Data Sheet

www.natekj.com

NATE DRIVE

NT33-AF3

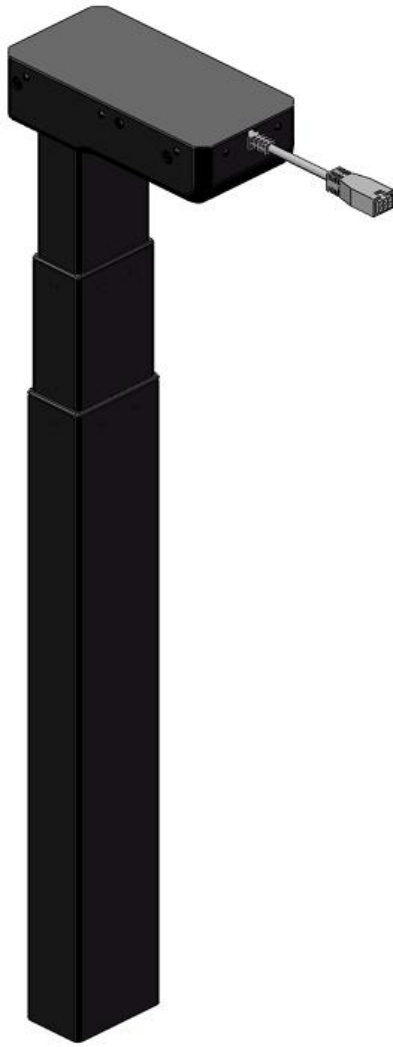

The AF3 is a compact three-part lifting column,rectangle tube non-hole lifting column with an outer tube size of 80 x 50 mm. The AF3 is a perfect choice for adjustable economy office desks using three columns and requiring a stroke length of maximum 650 mm. The AF3 lifting column has the same outer dimensions (80 x 50 mm) and mounting holes as the two-part AF2 column, which makes them fit the same top frame and foot constructions, including the Kick & Click™ top frame. For benching desk solutions, the column is available with a bench bracket.

The AF3 column is available in three standard colour (black, grey and white) - and can optionally be delivered in other colour. The column has the function of anti-collision, it minimizes the risk of the lift table hitting an obstacle.

AF3 can be matched with a variety of NATE customized hand controllers. Customers can choose functions such as USB charging, location memory, and child lock according to actual needs

---

Features：

• Reinforced column and optimised motor housing design for extra strength and stability

• Max. load：800 N per column

• Max. speed： 40 mm/s (no load)

• Standard installation dimension : 565mm

• Standard stroke length ： 650mm

• Weight：Approximately 7.4 kg per column

• Dimensions column：80 x 50 mm (outer profile) 、75 x 45 mm (middle profile) and 70 x40 mm (inner profile)

• Dimension motor housing： 195x 96 x 50 mm

• Colour：Available in black（RAL9005）、grey (EM2921)、white (RAL9016)

Options：

• Available with bench bracket

Usage：

• Synchronous drive of 2 lifting columns; 1 controller; 1 hand controller

• Duty cycle： 10 % ≈ 2 minutes continuous use at full load, followed by 18 minutes pause

• Ambient temperature： 10 to 40 °C

• Storage and transportation temperature： -10 to +70 °C

With a fully retracted length of 565 mm and a stroke length of 650 mm, the standard system obtains a desk height adjustment interval of 600 mm to 1250 mm, so the desk can be used for both sitting and standing work.

AF3

Ordering：

NT33--X--X--X--X--XXX/XXX--X--X--X--X

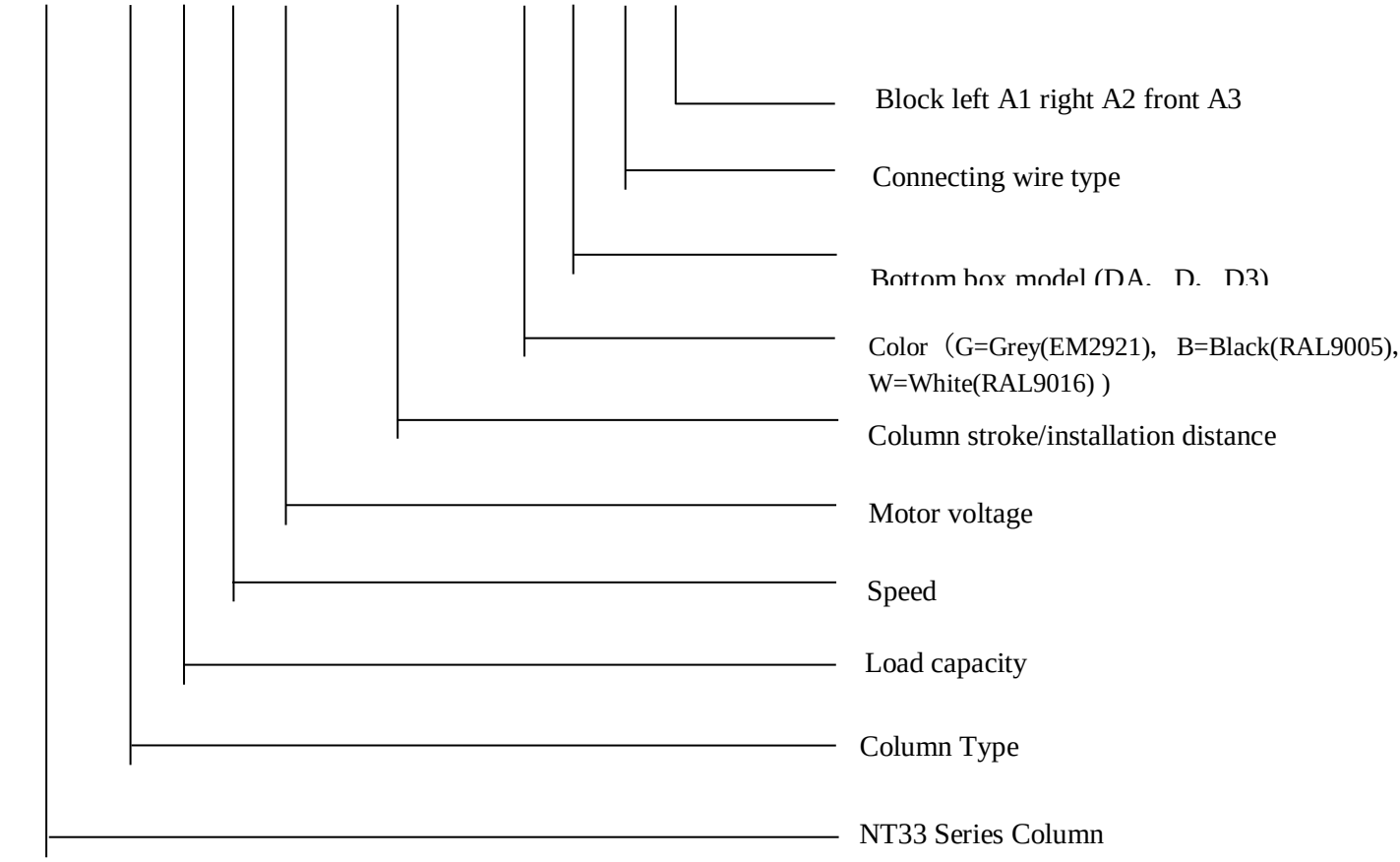

F stands for no hole, A stands for regular fit, R stands for inverted.

Note: The pads used for the table are combined with the two columns at positions A1 and A2, and the horizontal pads used for a single table are combined with the two columns at position A3.

Dimension drawings

ALL measurements do not include powder coat thickness

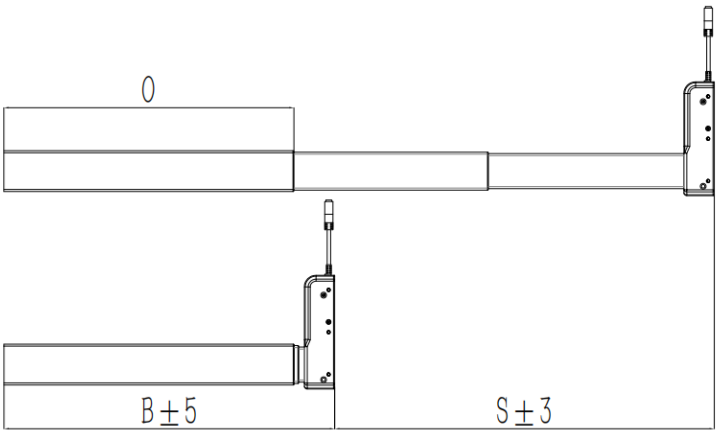

HF3A Built-in length, stroke length, and outer profile length

Version	Combination code	B (Built-in length) [mm]	S (Stroke length) [mm]	O (Outer profile length) [mm]
EU	AF3xxxx650/565	565	650	500

Installation dimensions, stroke, and outer tube length(mm)

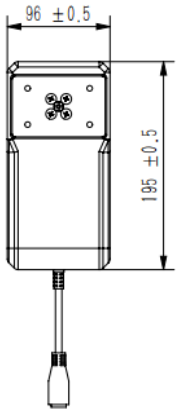

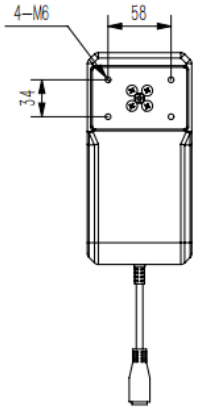

Outline dimension of motor housing dimension

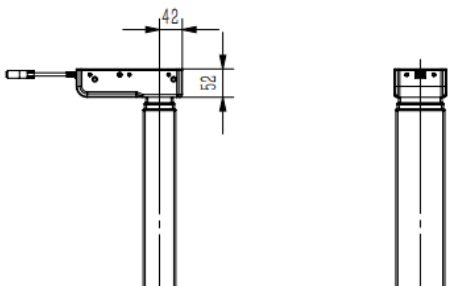

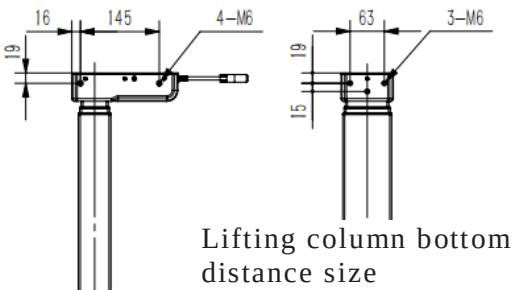

Lifting column bottom hole distance size

AF3 Motor-housing and profile dimensions(mm)

B1 welding block

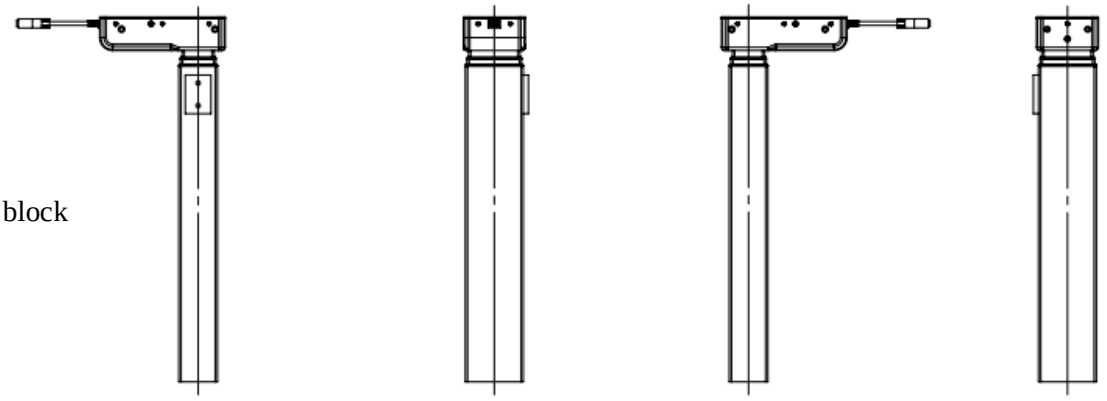

B2 welding block

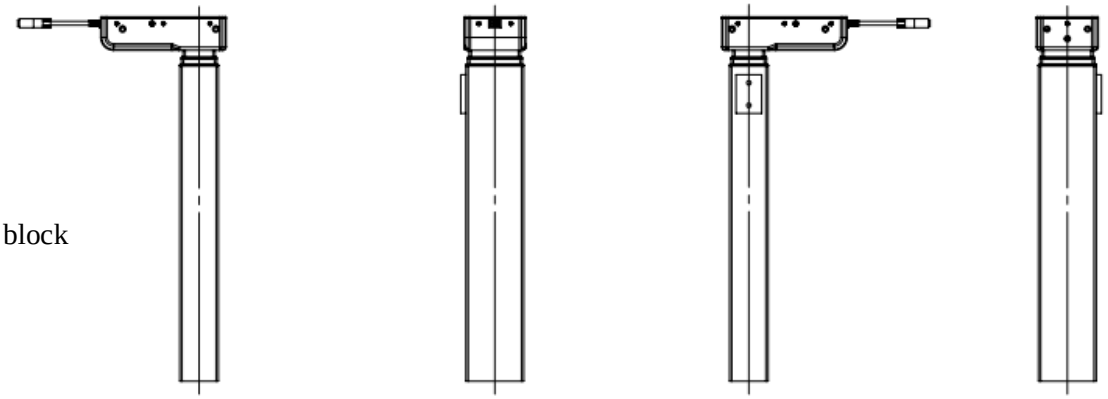

B3 welding block

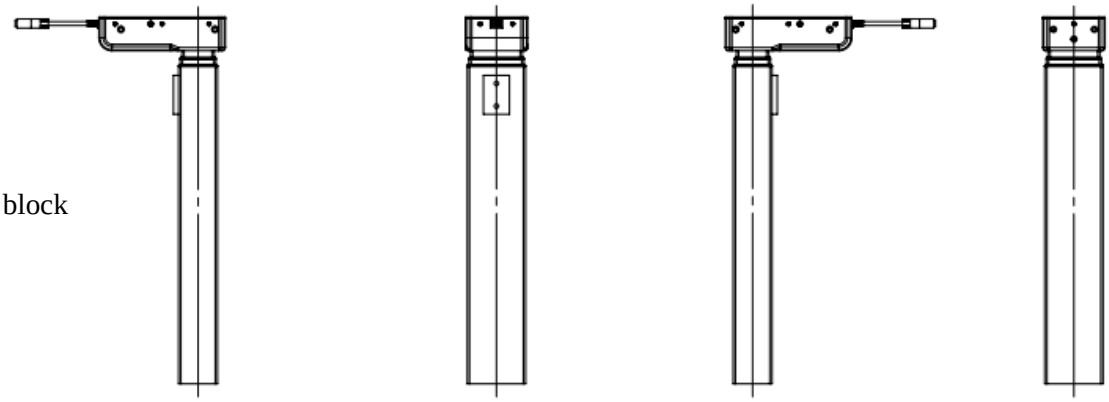

B4 welding block

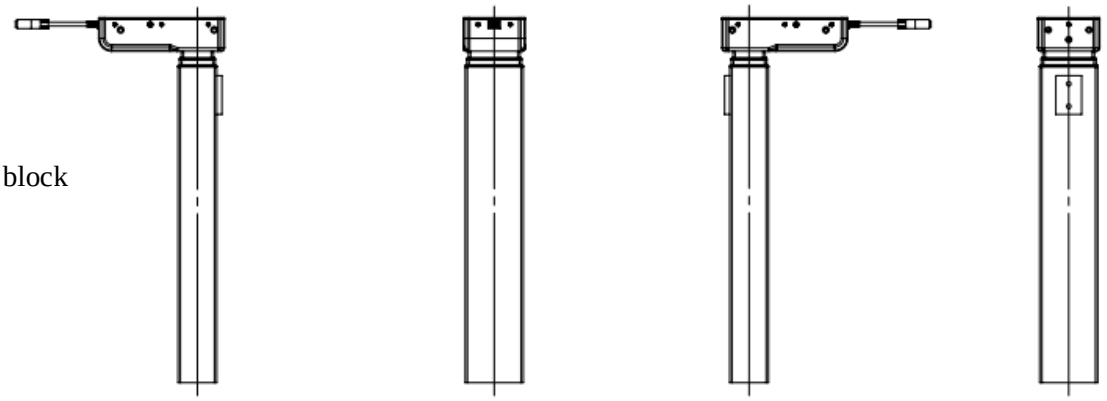

Optional welding block position (dimension unit: mm)

G1 welding block

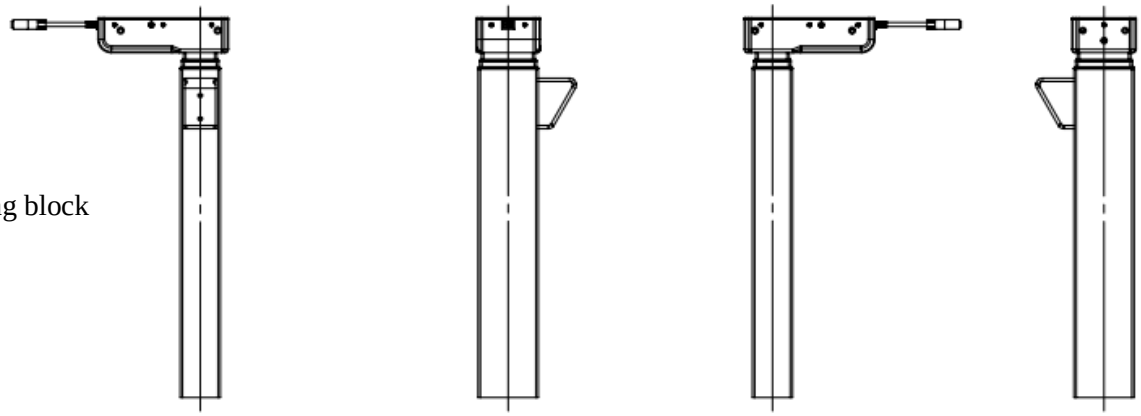

G2 welding block

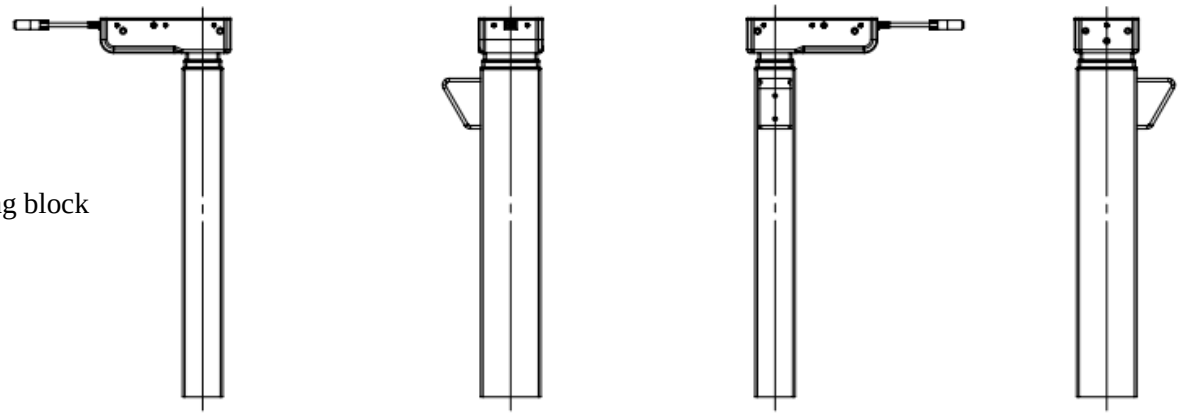

G3 welding block

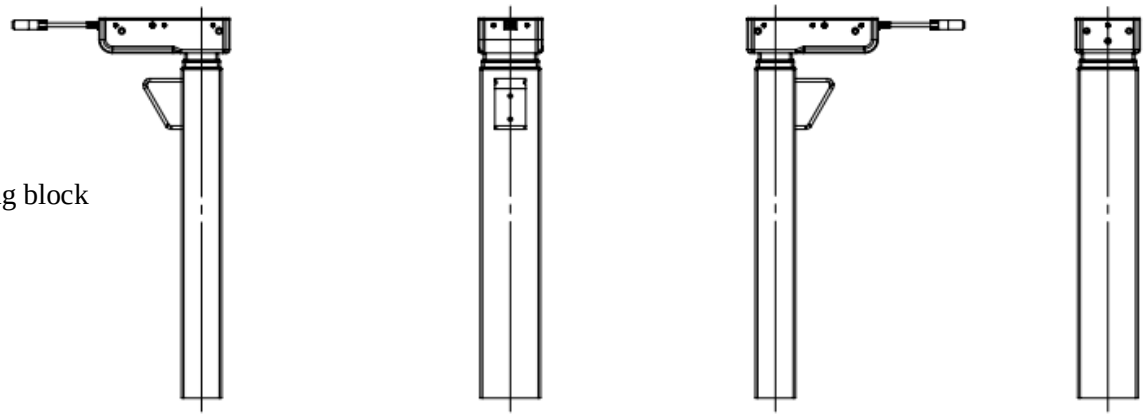

G4 welding block

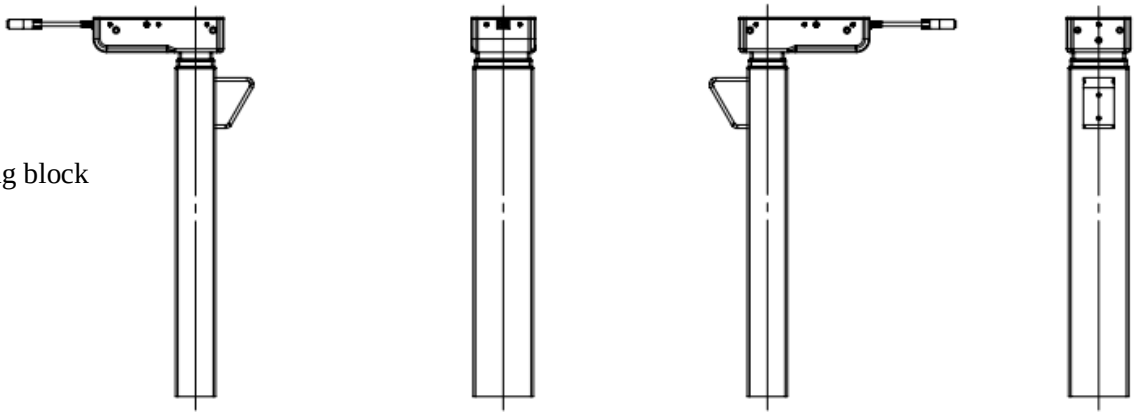

Welding block type options (dimension unit: mm)

Performance curves

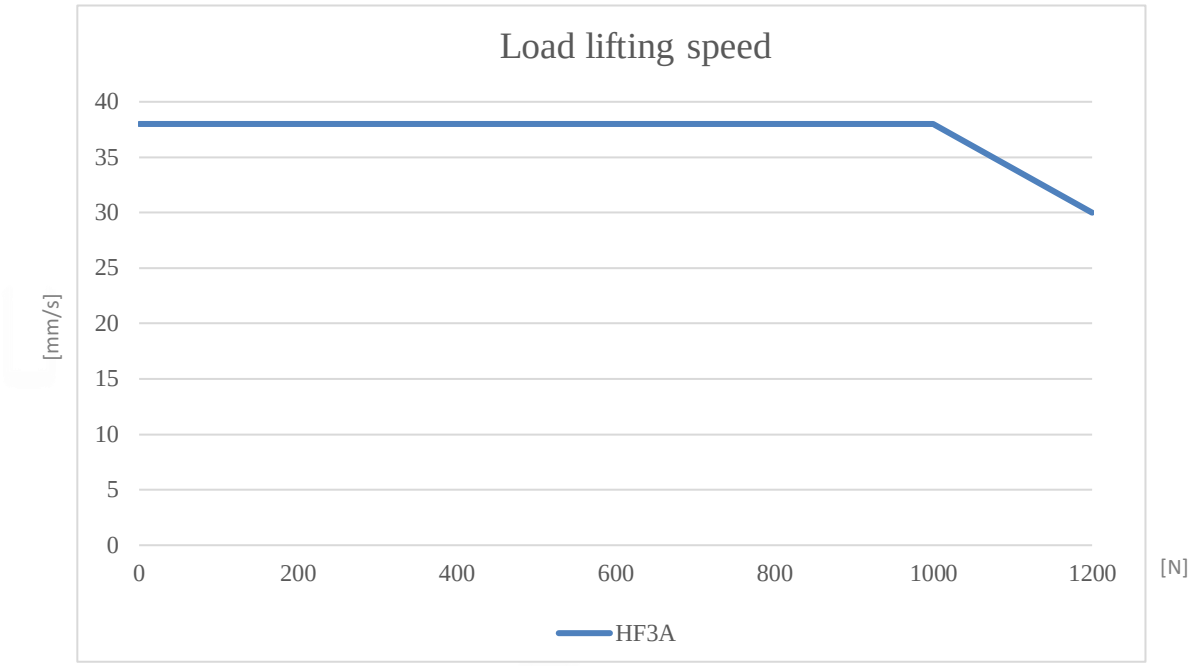

AF3 double lifting column equipped with BK controller (equally loaded)

The above measurement data were obtained with two AF3 lifting columns connected to the BK controller.The measured lifting column propulsion performance (desktop rise).

The above curves are for centrally placed loads. When the lifting column is subjected to a bending moment load, the friction will increase, and the thrust (or pull) will decrease accordingly.